Current part is item (8) on diagram. Available at www.oshkoshequipment.com

(1) SMR Code	(2) Federal Stock Number	(3) DESCRIPTION Reference Number & Mfr. Code	Usable On Code	UNIT of meas	(5) Qty inc. in Unit	(6) 30-day DS maint allowance (a) 1-20	(b) 21-50	(c) 51-100	(7) 30-day GS maint allowance (a) 1-20	(b) 21-50	(c) 51-100	(8) 1-yr alw per 100 equip cnt-gcy	(9) Depot maint alw per 100 equip	(10) Illustration (a) Figure No.	(b) Item No.
PAOZZ	4730-542-5599	ELBOW,PIPE: CRANKCASE DRAIN COCK 44405 (24617)		EA	1	*	*	*	*	*	*	*	*	1	2
PAFZZ	5310-732-0558	NUT, PLAIN, HEXAGON: PUMP ADAPTER AND FRONT PLATE MTG MS51967-8 (96906)		EA	4	*	*	*	*	*	*	*	*	1	3
PAFZZ	5310-959-4675	WASHER, LOCK:PUMP ADAPTER AND FRONT PLATE MTG MS35340-46 (96906)		EA	10	*	*	*	*	*	*	*	*	1	4
PAFZZ	2815-477-6245	ADAPTER, INJECTION PUMP 10889793 (19207)		EA	1	*	*	*	*	*	*	*	*	1	5
PAFZZ	2815-420-9062	ADAPTER, FUEL INJECTION: 10889776 (19207)		EA	1	*	*	*	*	*	*	*	*	1	6
PAFZZ	5307-443-9865	STUD, PLAIN: ADAPTER MTG 10898712 (19207)		EA	2	*	*	*	*	*	*	*	*	1	7
PAFZZ	2910-862-9064	GASKET: PUMP ADAPTER MTG 10889723 (19207)		EA	1	*	*	*	*	*	*	*	*	1	8
PAFZZ	5307-903-7674	STUD, PLAIN: FRONT PLATE MTG 7375681-1 (19207)		EA	1	*	*	*	*	*	*	*	*	1	9
KFFZZ		GASKET: FRONT PLATE MTG 10889737 (19207)		EA	1	SEE SET 2815-864-0299								1	10
PAFZZ	2815-136-1200	PLATE ASSEMBLY, ENGINE: FRONT 10889744-1 (19207)		EA	1	*	*	*	*	*	*	*	*	1	11
PAFZZ	5307-904-9601	STUD,PLAIN: FRONT PLATE AND PUMP ADAPTER MTG 10899081 (19207)		EA	2	*	*	*	*	*	*	*	*	1	12
PAFZZ	2815-136-1199	COVER, TIMING GEAR, INSPECTION: 10889739 (19207)		EA	1	*	*	*	*	*	*	*	*	1	13
PAFZZ	5305-269-3223	SCREW, CAP, HEXAGON HEAD: ENGINE FRONT PLATE TO GEAR COVER AND HYDRAULIC PUMP MTG MS90725-73 (96906)		EA	2	*	*	*	*	*	*	*	*	1	14
PAFZZ	5305-269-3211	SCREW, CAP, HEXAGON HEAD: FRONT PLATE TO CRANKCASE MS90725-60 (96906)		EA	6	*	*	*	*	*	*	*	*	1	15
PAFZZ	4730-044-4655	PLUG, PIPE: CRANKCASE 444655 (19207)		EA	1	*	*	*	*	*	*	*	*	1	16
PAFZZ	4730-221-2141	PLUG, PIPE: TURBOCHARGER DRAIN HOLE MS20913-8S (96906)		EA	1	*	*	*	*	*	*	*	*	1	17
PAFZZ	4730-221-2138	PLUG, PIPE: TURBOCHARGER OIL SUPPLY HOLE MS20913-3S (96906)		EA	1	*	*	*	*	*	*	*	*	1	18
XAHZZ		CYLINDER BLOCK AND CRANKCASE ASSEMBLY: MULTIFUEL 10889802 (19207)			1									1	19
PAFZZ	5315-498-7029	PIN,STRAIGHT,HEADLESS: CRANKCASE 10898728 (19207)		EA	2	*	*	*	*	*	*	*	*	1	20
PAFZZ	5307-477-3735	STUD,PLAIN: FUEL FILTER TO CRANKCASE AND TAPPET COVER 8758517 (19207)		EA	3	*	*	*	*	*	*	*	*	1	21
PAFZZ	5307-903-7675	STUD, PLAIN: CRANKCASE TO FLYWHEEL HOUSING 8758528 (19207)		EA	6	*	*	*	*	*	*	*	*	1	22
PAHZZ	5307-057-4507	STUD, PLAIN: CRANKCASE TO FLYWHEEL HOUSING 8758520 (19207)		EA	2				*	*	*	*	*	1	23
PAHZZ	5315-412-2002	PIN, HOLLOW: CRANKCASE TO FLYWHEEL HOUSING 7748968 (19207)		EA	2				*	*	*	*	*	1	24
XAHZZ		CYLINDER BLOCK: ENGINE,MULTIFUEL 10889717 (19207)			1									1	25

Current part is item (8) on diagram. Available at www.oshkoshequipment.com

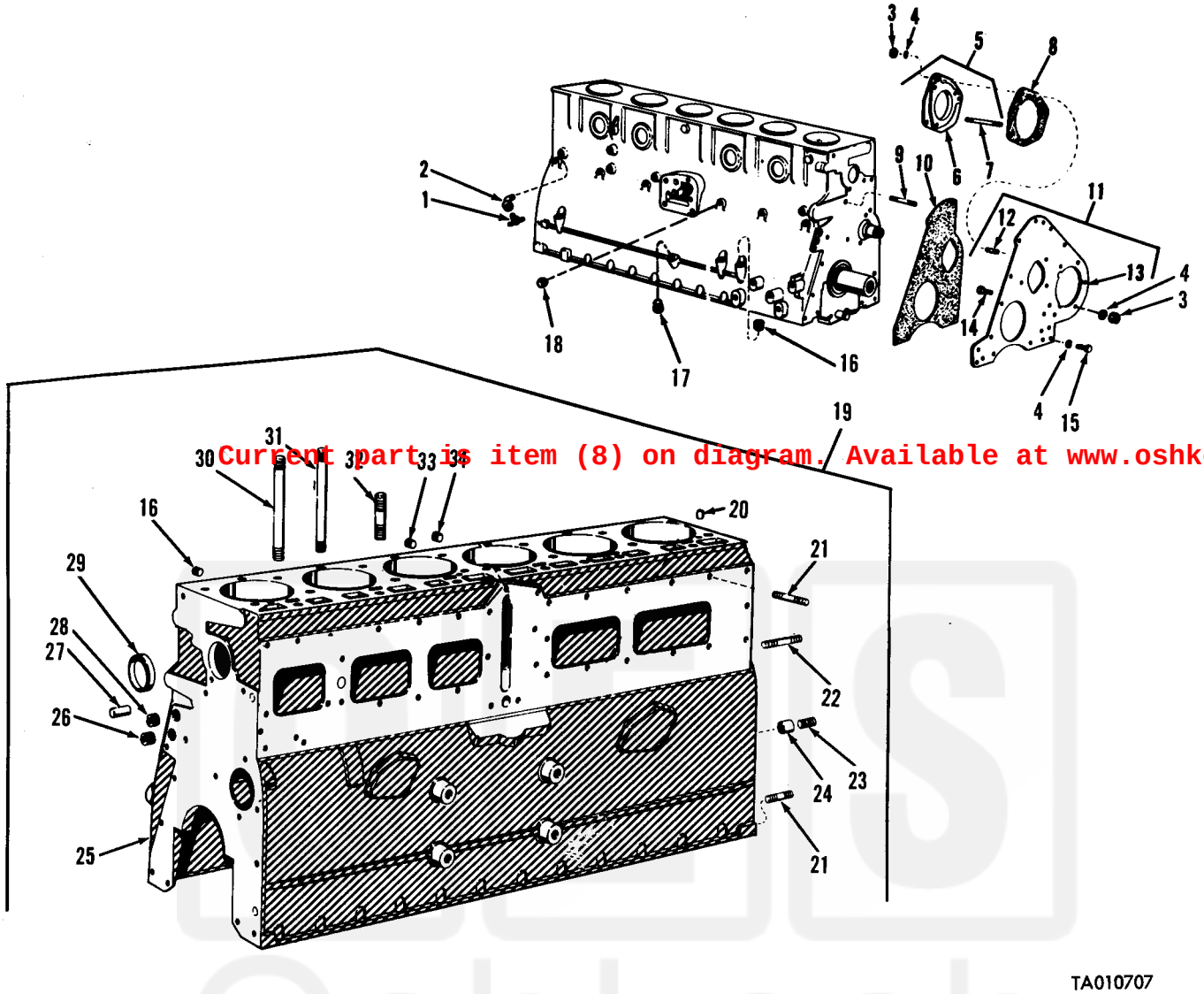

Current part is item (8) on diagram. Available at www.oshkoshequipm

Figure 1. Crankcase, Front Plate and Associated Parts.

Current part is item (8) on diagram. Available at www.oshkoshequipm